全新高端工程安装系统

M-FXA系列

s))e 是斯贝克电子（嘉善）有限公司的注册商标。

所有其他商标为相关第三方所有，斯贝克电子（嘉善）有限公司及其附属机构和产品并不隶属于这些商标所有人，也不为其背书或赞助。

EASE® 是AFMG技术有限公司的注册商标, powerCON® 是Neutrik公司的注册商标。
设计: pixelmaedchen.de | 渲染: www.redemann-media.de | 照片: www.annikafeuss.com
Photo by © Lukas Gojda (AdobeStock)
本文件中的所有产品规格如有变更，恕不另行通知。

s))e AUDIOTECHNIK

SE Audiotechnik HQ
Neuenhofer Strasse 42-44
42657 Solingen,Germany
Mail: info@se-audiotechnik.de
Web: www.se-audiotechnik.de

德国美高亚太发展中心
斯贝克电子(嘉善)有限公司
浙江省嘉善惠民街道开发区路8号
Hotline: +86 400 109 1122
Mail: sales@se-audiotechnik.com

官方网站　官方微信　官方抖音

se 2025/02 1000

德匠精工　响撼全球
The Sound Experience

应用案例
PRODUCT APPLICATIONS

国家会展中心

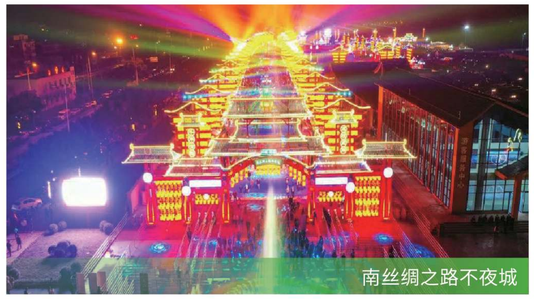
南丝绸之路不夜城

中国北京世界园艺博览会

安徽绩溪体育馆

梦长安—大唐迎宾盛礼

西安工业大学

大雁塔音乐喷泉

安徽桐城农商银行

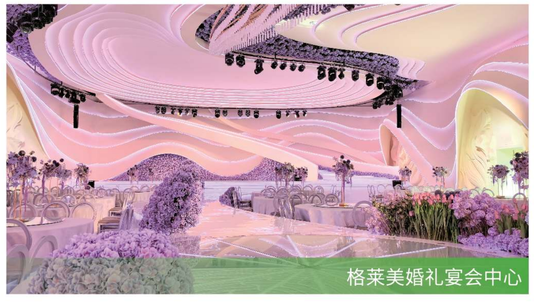
格莱美婚礼宴会中心

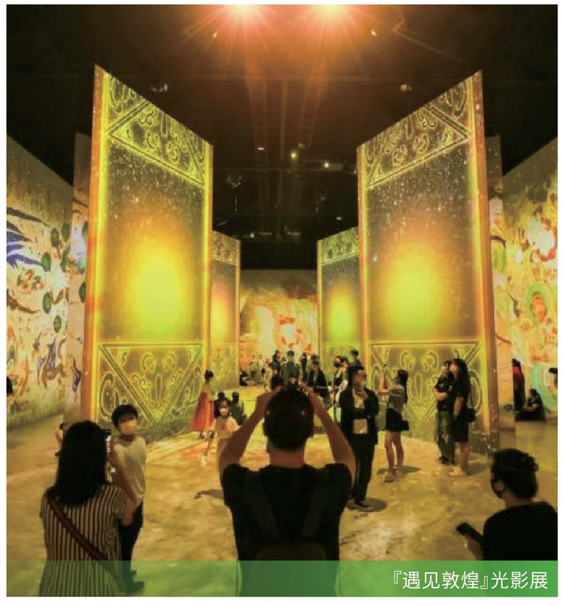
『遇见敦煌』光影展

系列简介
INTRODUCTION

M-FXA系列由M-FXA、M-FXA SUB和M-FXA FS组成，是SE Audiotechnik推出的全新高端固定安装系统。在那些对音质具有极高要求的剧院剧场、体育场馆、礼堂、教堂及其他固定安装场所，这种灵活紧凑的高端无号角有源阵列扩声系统可以带给您完美的解决方案。

M-FXA series is composed of M-FXA,M-FXA SUB and M-FXA FS,and it is the brand-new high-end installation system released by SE Audiotechnik.No matter for theatres,sports stadiums,auditoriums,churches or other installation venues with high requirement for sound quality,this flexible and compact high-end hornless active array system offers you perfect audio solution.

如今，建筑设计日新月异，在追求建筑创意与美观性的同时，复杂的建筑结构，特殊的建筑材料，更是对建筑内扩声设施提出了更高的要求。扩声设备不仅需要更现代的造型，与现代建筑设计相得益彰，还需要在具有挑战性的建声环境下，提供精准卓越的指向性控制能力。与此同时，改造翻新的建筑结构，为了确保安全性，往往需要更轻质、更耐用的扩声系统，以免对建筑结构造成损坏。

Nowadays, architectural design changes with each passing day. In pursuit of construction innovation and aesthetic sense, complicate architectural structure and special architectural materials bring higher requests for indoor PA.PA devices need not only more modern appearance to blend into the building design,but also more accurate and outstanding directivity. At the same time,the refurbished and remodeled building always needs lighter and more durable PA system to avoid causing damages to the structure.

M-FXA系统汇集灵活性、美观性、便捷性与高清晰度、高均匀度于一体，有效满足了以上各种固定安装场合的声学要求。清晰卓越的音质与均匀的声场，确保听音区无死角覆盖且响应均匀。精准卓越的指向性控制能力，避免天花板等障碍物回声。结实可靠的压铸吊挂件被铝制螺丝牢牢锁固，配合严格把控的结构间隙，可以极致减小箱体间的异常振动。小巧、灵活的造型与周边环境浑然天成。

M-FXA system integrates the flexibility,aesthetics,portability with high clarity and uniformity,effectively meets the sound coverage need of installation venues above.The clear and outstanding quality and well-balanced sound field assures a consistent coverage and sound uniformity.Accurate directivity avoids the echo from ceiling and other obstacles. Extraordinary structural precision, super strong die-casting aluminum frame and rigid aluminum screw holder candiminish the needless resonance.The compact and flexible appearance is in perfect harmony with its surroundings.

www.se-audiotechnik.com

M-FXA 无号角有源线阵列扩声系统

ACTIVE LINE ARRAY SYSTEM WITH HORNLESS DESIGN

■ 无号角，小尺寸，高保真

PRISTINE ACOUSTIC REPRODUCTION WITH HORNLESS DESIGN, SMALL SIZE WITH HIGH SPL

M-FXA通过采用HiFi级无号角设计和2.8"小型扬声器来确保剧场剧院人声的高保真度。相比于号角音响，无号角设计使得声音不经过号角压缩，自然释放，声音更清晰，更自然真实。此外，SE研制的小尺寸中高频扬声器单元对折环的反相振动和音盆的分割振动进行了精准的控制，确保系统中所有扬声器单元都工作在理想的活塞运动状态，以此实现人声的高还原度。

M-FXA adopts the HiFi-level 2.8" speakers with hornless design to ensure that the sound is reproduced naturally without horn compression which is clearer and closer to the real sound compared to that of horn speakers.In addition,the small sized middle and high frequency drivers control the reverse vibration and breaking vibration accurately, which ensures all drivers move in a perfect piston direction for reproducing the real sound.

■ 精准指向控制，均匀声场覆盖，弥补建声环境缺陷

ACCURATE SOUND DIRECTION CONTROL, EVEN SOUND COVERAGE, MAKE UP FOR DISADVANTAGE OF SOUND

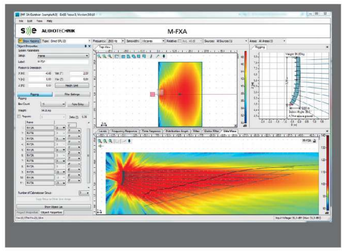

M-FXA 正面有7只1"无号角直接辐射高音和8只2.8"中音扬声器采用对称方式布置，紧凑排布。一只音箱就是4组双2.8"线阵列音箱的组合体，而且对比普通线阵更紧密的排列在一起，以此改善音箱垂直和水平方向的覆盖。因M-FXA对声音覆盖的均匀度和清晰度有着不同凡响的控制力，有效弥补了建声环境导致的声干涉问题。

M-FXA contains 7 pieces of 1" direct radiate tweeter w/o horn and 8 pieces of high efficiency 2.8" full range speakers , all aligned compact and symmetrical. One speaker system can already be considered as 4 dual 2.8" line arrays, which improves the sound coverage both vertically and horizontally. Thanks to the distinguished control for sound consistence and clarity of M-FXA, it is able to offset the sound interference problem caused by the sound building environment effectively.

■ 大功率D类功放，大声压级

LARGE CLASS D AMPLIFIER AND HIGH SPL

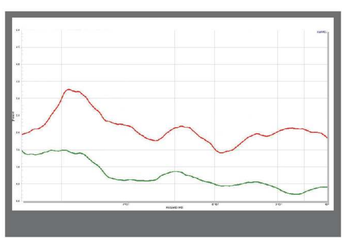

带号角压缩高音谐波失真曲线（1M/1W）
无号角球顶高音谐波失真曲线（1M/1W）

M-FXA采用全新的600W D类功放，动态余量充足，最大声压级为130dB，体积小、重量轻、效率高，内置精准调试的升级版DSP，多段限幅，有效保护，确保系统能在安全稳定的运行状态下输出完美音色，即使在极端环境下，仍然保证系统安全工作稳定运行。由此，M-FXA拥有大声压且不易失真的特性，明亮清晰。

M-FXA' s distinct sound is achieved by an upgraded 600 W class-D power amplifier,delivering 130 dB max SPL with enough headroom.Small size,light weight,high efficiency and upgraded accurate internal DSP, as well as the effective limiter ensure the system to reproduce perfect sound under safe and stable operation even in extreme SPL.

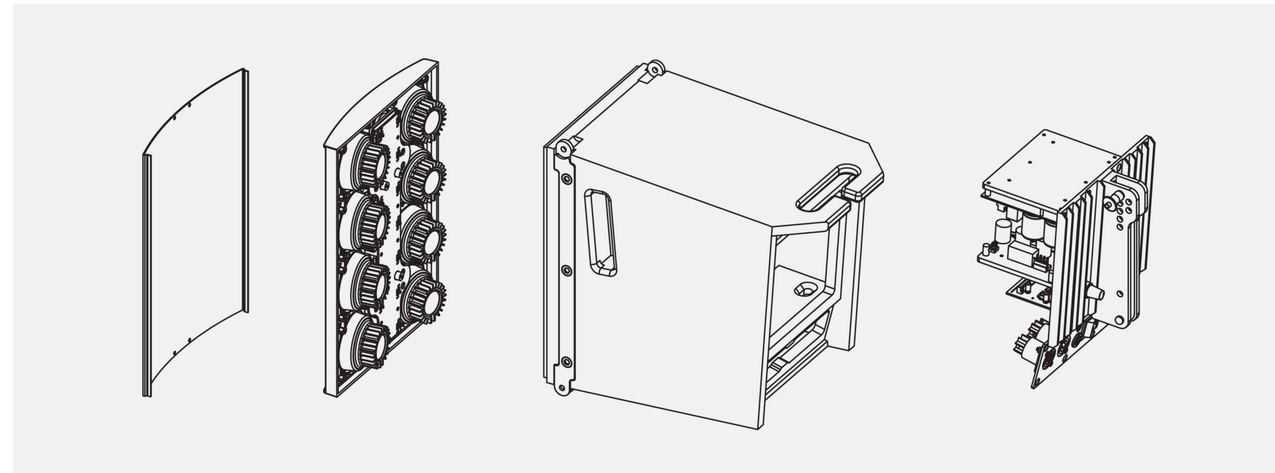

■ EASE模拟，智能便捷

EASE . GLL IS AVAILABLE, BOTH INTELLIGENT AND CONVENIENT

M-FXA采用模块化设计，通过配套的EASE.GLL数据，可以快速在EASE与EASE Focus中对声场覆盖、声压级水平、吊挂角度及其它相关参数进行模拟，以确保良好的音响效果，节省搭建时间。对于剧场剧院、体育馆、音乐厅等固定安装场所而言，EASE数据大大优化了系统的声学设计，为用户节省更多的时间，达到更佳的效果。

M-FXA adopts modular design. With EASE.GLL data for M-FXA, users can simulate audience coverage, sound pressure levels, rigging and other parameters in EASE and EASE Focus software to ensure good sounding results and faster setup times.For installations in theatres, stadiums,music halls and others, EASE helps to optimize acoustic design of sound system and to save more time for better results.

■ 可靠固定，优雅精致

RELIABLE FIXATION AND ELEGANT APPEARANCE

M-FXA配置了3个固定点，满足工程固定安装需求。7档线阵列箱体夹角调节满足了对场地均衡一致的声音覆盖角度的需求。全新设计的网罩完美展示了M-FXA高端优雅的外观特色，极其紧凑低调的尺寸设计，让其易于隐藏。明装，可作剧场装饰，与舞美设计完美融合；暗装，也极易于隐藏。

Equipped with 3 rigging points can meet the demands of installation demand.7 spay angles linear arrays can meet the demand of consistent sound coverage. Brand-new grills perfectly demonstrate the high-end elegant appearance of M-FXA.The extremely compact size and low-profile design makes it easy to hide. M-FXA exposed in the air, can be an elaborate decoration for the theatre. What is more, it is also very convenient to hide it when necessary.

M-FXA FS 紧凑型可吊挂有源低音系统
COMPACT FLYABLE ACTIVE BASS SYSTEM

小身材，高性能
COMPACT ENCLOSURE AND HIGH PERFORMANCE

M-FXA FS是与M-FXA系统配套使用的可吊挂低音扩展模块。通过使用两只精巧设计的6"x 9"低音扬声器，该有源低音系统保持了M-系列家族苗条低调的设计风格。单只低音模块的高度正好是两只全频音箱M-FXA的大小，使得整串线阵的尺寸非常紧凑小巧。

The M-FXA FS is the long-awaited flyable bass extension module for the well-known M-FXA line array system. By employing two specially designed 6 by 9 inch woofers, the subwoofer maintains a slim and discreet design style. The height of a single bass module is exactly the same as that of two full-range speakers M-FXA, which complements the overall system dimension.

智能配置，高效便捷
INTELLIGENT SETUP AND HIGH-EFFICIENT, CONVE NIENT

M-FXA FS内置全新设计的800W D类功放和24-bit/48kHz DSP，通过使用不同模式拨动开关，可减少吊挂式低音与M-FXA等其他音箱模块进行组合搭配时的安装时间。

M-FXA FS contains a newly designed 800W class-D power amplifier and is equipped with 24-bit/48kHz DSP.Built-in factory presets reduce setup times with M-FXA and other existing M-Line systems in various configurations.

EASE模拟，配件优化
EASE SIMULATION, UPGRADED ACCESSORIE

M-FXA FS的EASE GLL数据，可允许用户快速在EASE与EASE Focus中对低音进行模拟，并搭建出满足不同扩声需求的系统，以确保良好的音响效果和更快的设置时间。优化的吊件和全新的吊架更具灵活性，确保低音能快速融入整个M-FXA线阵系统中。

EASE GLL files is available for M-FXA FS, which can be simulated fast in EASE Focus,and build a system to meet different sound coverage requirements to guarantee the good sound effects and faster setup time. Upgraded rigging accessories and new rigging brackets are more flexible to assure the bass can be integrated to the whole M-FXA line array system.

有效加强中低频力度
IMPROVE MID TO LOW FREQUENCY EFFECTIVELY

针对阶梯状的剧场剧院或报告厅等场合，地面堆叠的低音不能满足低频传输的需求，而可吊挂式的M-FXA FS就能很好地解决这一问题。配套M-FXA使用后，声音的中低频力度明显加强，声音更饱满。

For occasions such as theaters or lecture halls with terraced seats,the subwoofer stacked on the ground cannot meet the needs of low-frequency transmission. In this case,the flyable M-FXA FS can well solve this problem.When used together with M-FXA,the low and medium frequency intensity of sound is significantly enhanced and the sound is richer.and other existing M-Line systems in various configurations.

M-FXA SUB 倒相式有源低音系统
BASS-REFLEX ACTIVE SUBWOOFER SYSTEM

优化设计，最大声压级133dB
UPGRADED DESIGN, THE MAX SPL IS 133 dB

SE两点堆叠系统，安全系数更高，堆叠安装更简单。改进导音口设计，降低了气流风噪，提高系统最大声压级，改善了整体性能全新设计的功放输出更有力的低音，最大声压级133dB。内置灵活的DSP系统，无需外接信号处理器，为用户节省设备成本。

A two-point SE rigging system allows for safe & easy stacking.The improved port design increases the overall performance,reduce the port-noise and improve the maximum system SPL.The newly designed amplifier helps to deliver loads of punch with 133 dB Max. SPL. Equipped with a cost-effective,yet flexible DSP system,there is no need for external signal processing.

极致体积声压比
EXTREME RATIO OF SIZE TO SPL

M-FXA SUB拥有极致的体积声压比，体积小效率高，更易隐藏。同时单只重量仅为23kg，最大限度减少仓储与运输成本，减轻工作人员搬运负担。

M-FXA SUB has the extreme ratio of size to SPL, more small size with more efficient performance.At the same time, the single module is only 23 kg,to the most extent to reduce the werehouse and transportation cost, reduce the carrying burden for workers.

即插即用，智能便捷
PLUG AND PLAY, INTELLIGENCE AND CONVENIENCE

M-FXA SUB采用有源一体化设计，集成的内置预设能够帮助用户快速调用相关设置，来搭配不同的M-FXA系统。通过选择专用的工厂预设，用户可以快速完成End-Fire(端射) 或Cardioid心型低音设置 。此外，用户还可以控制各种参数，如增益、均衡器、滤波器、延时等。新的功放面板还可选用附带的防雨罩，保护产品免受雨淋或户外受潮。

M-FXA SUB applies the active integration design.Integrated presets help to quickly load different system setups to be used with various M-FXA configuration.Setting up an end-fire or cardioid setup can be done by choosing dedicated factory presets.Users can control various parameters such as gain, equalizer,filters,delay and more.The new amplifier panel can be extended with an additional rain-protection cover that helps protecting the electronics from rain or moist outdoor environment.

EASE模拟，便捷高效
EASE SIMULATION, CONVENIENT AND EFFICIENT

M-FXA SUB配套的EASE GLL数据，可以快速在EASE与EASE Focus中进行模拟，并搭建出满足不同扩声需求的系统，以确保良好的音响效果和更快的设置时间。

EASE GLL files is available for M-FXA SUB,which can be simulated fast in EASE and EASE Focus,and build a system to meet different sound coverage requirements to guarantee the good sound effects and faster setup time.

参数规格SPECIFICATION

型号:M-FXA	Model name: M-FXA
频率响应范围 (-10 dB):100 Hz - 20 kHz	Frequency range(-10 dB):100 Hz - 20 kHz
覆盖范围 (-6 dB) [H x V]:120° x 16°	Coverage angles (-6 dB) [H x V]:120° x 16°
峰值声压级[1]:130 dB	Maximum Peak SPL[1]:130 dB
系统类型:有源两分频系统	System type:2-way active
分频频点:1.9 kHz	Crossover frequency:1.9 kHz
换能单元:MF:8 x 2.8"单元 (0.75"音圈) HF:7 x 1"单元 (1"音圈)	Transducers:MF:8 x 2.8" drivers (0.75" voice coil) HF:7 x 1" drivers (1" voice coil)
箱体类型:倒相箱	Enclosure type:Vented box
功放类型:D类功放，带SMPS	Type:class-D with SMPS
总功率:600 W	Total power:600 W
每通道输出功率:中音单元:300 W 高音单元:300 W	Output power per channel:MF:300 W HF:300 W
保护:短路保护，过热保护，过流保护	Protection:Short circuit, overheating, overcurrent
连接:输入信号:balanced XLR 3-pin female 信号并联输出：balanced XLR 3-pin male 电源输入/输出接口：Neutrik PowerCon (Max:15 A) (最多只能串联6只)(220 V:6 pcs)	Connectors:Input signal: balanced XLR 3-pin female Link output: balanced XLR 3-pin male Power input/output interface:Neutrik PowerCon (Max:15 A) (Up to 6 pcs in series only)(220 V:6 pcs)
线序: Pin 1:接地 Pin 2:正端 Pin 3:负端	Wiring:Pin N:Neutral Pin L:Conductor Pin E:Ground
输入灵敏度:0dBu	Input sensitivity:0 dBu
DSP:48 kHz/24-bit，可拓展动态范围 处理延时:1.1 ms	DSP:48 kHz/24 bit with extended dynamics Processing latency:1.1 ms
处理:电平调节，工厂EQ预设	Processing:Level, factory EQ presets
用户控制:电源:ON/OFF 开关 电平:8档旋钮 (-50, -20, -10, -6, -3, -2, -1, 0) 箱体数量:8档旋钮 (1 - 8+)	User controls:Power:ON/OFF switch Level:8-position rotary knob (-50, -20, -10, -6, -3, -2, -1, 0) Line units:8-position rotary knob (1 - 8+)
产品尺寸 [H x W x D]:210 x 317 x 359 mm **(包括配件)**	Product dimensions [H x W x D]: 210 x 317 x 359 mm (Including rigging)
重量:8.3 kg	Weight:8.3 kg
箱体材料:12 mm 精选多层板	Cabinet:12 mm plywood
箱体喷漆:黑色或白色聚脲喷漆	Cabinet finishing:Black or white polyurea coating
网罩:粉末涂层穿孔钢	Grille:Powder coated perforated steel
吊挂角度:0°, 1°, 2°, 3°, 4°, 6°, 8°	Splay angles:0°, 1°, 2°, 3°, 4°, 6°, 8°

[1] 使用12dB峰值因数的粉红噪声测试，自由场

[1] Measured with 12 dB Crest factor Pink Noise, whole space

结构图STRUCTURE DIAGRAM

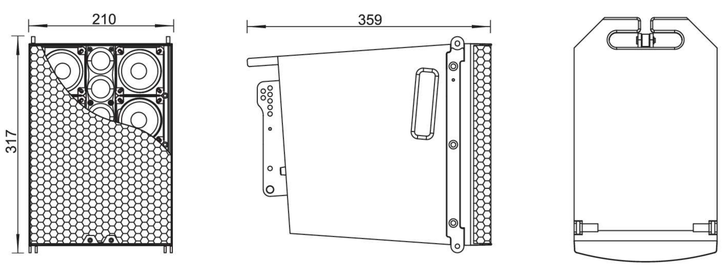

www.se-audiotechnik.com

参数规格SPECIFICATION

型号:M-FXA FS	Model name: M-FXA FS
频率响应范围 (-10 dB):52Hz-143Hz	Frequency range(-10 dB):52Hz-143Hz
覆盖范围 (-6 dB) [H x V]:全指向	Coverage angles (-6 dB) [H x V]:omnidirectional
峰值声压级[1]:129 dB	Maximum Peak SPL[1]:129 dB
系统类型:有源系统	System type:Active system
换能单元:2 x (6" x 9") 单元 (2"音圈)	Transducers:2 x (6" x 9") drivers (2" voice coil)
箱体类型:倒相箱	Enclosure type:Vented box
功放类型:D类功放，带SMPS	Type:class-D with SMPS
总功率:800 W	Total power:800 W
保护:短路保护，过热保护，过流保护	Protection:Short circuit, overheating, overcurrent
连接:输入信号:balanced XLR 3-pin female 信号并联输出：balanced XLR 3-pin male 电源输入/输出接口：Neutrik PowerCon (Max:15 A) (最多只能串联6只)(220 V:6 pcs)	Connectors:Input signal: balanced XLR 3-pin female Link output: balanced XLR 3-pin male Power input/output interface:Neutrik PowerCon (Max:15 A) (Up to 6 pcs in series only)(220 V:6 pcs)
线序: Pin 1:接地 Pin 2:正端 Pin 3:负端	Wiring:Pin N:Neutral Pin L:Conductor Pin E:Ground
输入灵敏度:0dBu	Input sensitivity:0 dBu
DSP:48 kHz/24-bit，可拓展动态范围 处理延时:1.1 ms	DSP:48 kHz/24 bit with extended dynamics Processing latency:1.1 ms
处理:音箱DSP预设，延迟，EQ：HPF/LPF，参数EQ (Q, F, 增益)， RMS限制器，峰值限制器，反相，静音，输入增益	Processing:Speaker presets, Delay, EQ: HPF/LPF,Parametric EQ (Q, F, Gain), RMS Limiter,Peak Limiter, Phase Invert, Mute, Input Gain;
用户控制:LCD显示屏与数字无极旋钮控制	User controls:LCD Screen and digital encoder with push button
产品尺寸 [H x W x D]:210 x 651 x 430 mm **(包括配件)**	Product dimensions [H x W x D]: 210 x 651 x 430 mm (Including rigging)
重量:21 kg	Weight:21 kg
箱体材料:15 mm 精选多层板	Cabinet:15 mm plywood
箱体喷漆:黑色或白色聚脲喷漆	Cabinet finishing:Black or white polyurea coating
网罩:粉末涂层穿孔钢	Grille:Powder coated perforated steel
吊挂角度:0°, 1°, 2°, 3°, 4°, 6°, 8°	Splay angles:0°, 1°, 2°, 3°, 4°, 6°, 8°

[1] 使用12dB峰值因数的粉红噪声测试，自由场

[1] Measured with 12 dB Crest factor Pink Noise, whole space

结构图STRUCTURE DIAGRAM

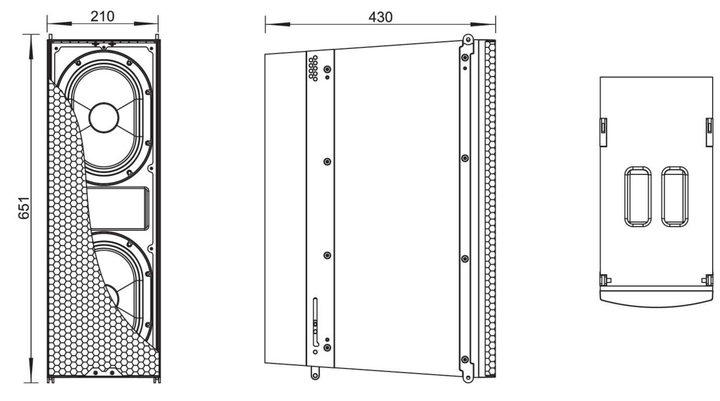

www.se-audiotechnik.com

参数规格SPECIFICATION

型号:M-FXA SUB	Model name: M-FXA SUB
频率响应范围 (-10 dB):36Hz-145Hz	Frequency range(-10 dB):36Hz-145Hz
覆盖范围 (-6 dB) [H x V]:全指向	Coverage angles (-6 dB) [H x V]:omnidirectional
峰值声压级[1]:133 dB	Maximum Peak SPL[1]:133 dB
系统类型:有源系统	System type:Active system
换能单元:1 x 12"单元 (3"音圈)	Transducers:1 x 12"drivers (3" voice coil)
箱体类型:倒相箱	Enclosure type:Vented box
功放类型:D类功放，带SMPS	Type:class-D with SMPS
总功率:800 W	Total power:800 W
保护:短路保护，过热保护，过流保护	Protection:Short circuit, overheating, overcurrent
连接:输入信号:balanced XLR 3-pin female 信号并联输出：balanced XLR 3-pin male 电源输入/输出接口：Neutrik PowerCon (Max:15 A) (最多只能串联6只)(220 V:6 pcs)	Connectors:Input signal: balanced XLR 3-pin female Link output: balanced XLR 3-pin male Power input/output interface:Neutrik PowerCon (Max:15 A) (Up to 6 pcs in series only)(220 V:6 pcs)
线序: Pin 1:接地 Pin 2:正端 Pin 3:负端	Wiring:Pin N:Neutral Pin L:Conductor Pin E:Ground
输入灵敏度:0dBu	Input sensitivity:0 dBu
DSP:48 kHz/24-bit，可拓展动态范围 处理延时:1.1 ms	DSP:48 kHz/24 bit with extended dynamics Processing latency:1.1 ms
处理:音箱DSP预设，延迟，EQ: HPF/LPF，参数EQ (Q, F，增益)， RMS限制器，峰值限制器，反相，静音，输入增益	Processing:Speaker presets, Delay, EQ: HPF/LPF,Parametric EQ (Q, F, Gain), RMS Limiter,Peak Limiter, Phase Invert, Mute, Input Gain;
用户控制:数字编码器按钮	User controls:Digital encoder button
产品尺寸 [H x W x D]:385 x 507 x 495 mm **(包括配件)**	Product dimensions [H x W x D]：385 x 507 x 495 mm (Including rigging)
重量:23 kg	Weight:23 kg
箱体材料:15 mm 精选多层板	Cabinet:15 mm plywood
箱体喷漆:黑色或白色聚脲喷漆	Cabinet finishing:Black or white polyurea coating
网罩:粉末涂层穿孔钢	Grille:Powder coated perforated steel
[1]使用12dB峰值因数的粉红噪声测试，自由场	[1]Measured with 12 dB Crest factor Pink Noise, whole space

结构图STRUCTURE DIAGRAM

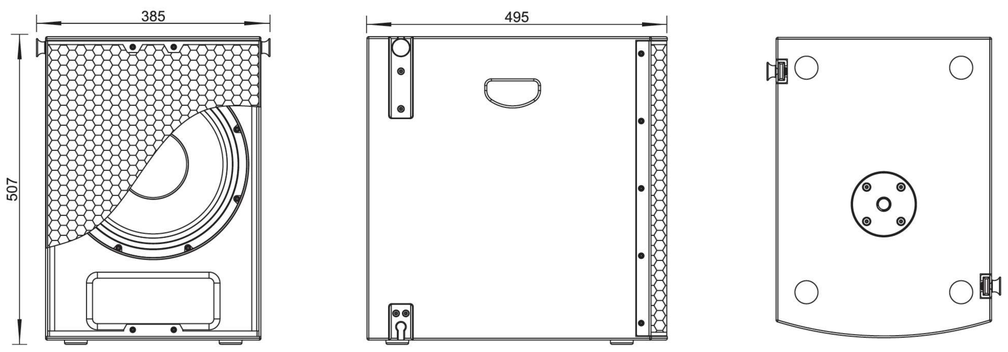

产品附件ACCESSORIES

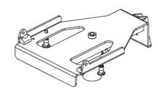

M-F3A UB
U型托架

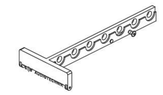

M-F3A BF
吊架

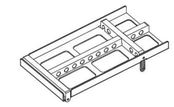

M-F3A FS BF
吊架

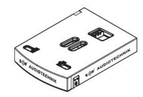

M-F3A SFi S12
地面堆叠架

M-F3A BF SLIM
轻型吊架

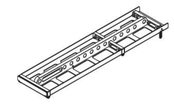

M-F3A FS BFX
M-FXA FS和
M-FXA的组合吊架

SPS20
支撑杆

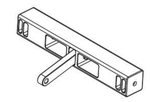

M-F3A FA34
M-FXA FS转M-FXA

应用方式APPLICATION CASES

*1.具体搭配数量可根据实际需求调整。2.低音可自由搭配B系列产品。

会议厅

2 x **M-FXA**
1 x **M-FXA SUB**
1 x **M-F3A UB**
1 x **SPS20**

会议厅/报告厅

4 x **M-FXA**
3 x **M-FXA SUB**
1 x **M-F3A SFi S12**

多功能厅/宴会厅

8 x **M-FXA**
6 x **M-FXA SUB**
1 x **M-F3A BF**

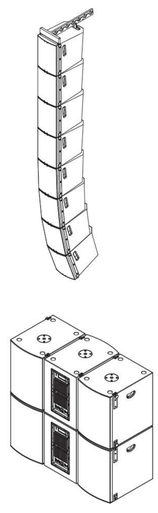

礼堂/剧场/体育馆

6 x **M-FXA**
2 x **M-FXA FS**
6 x **M-FXA SUB**
1 x **M-F3A FA34**
1 x **M-F3A FS BF/BFX**

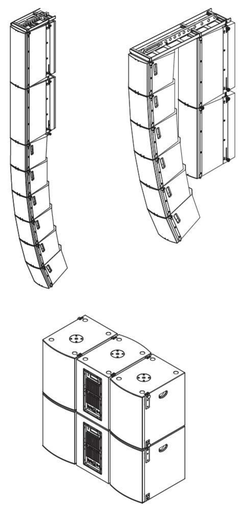

www.se-audiotechnik.com